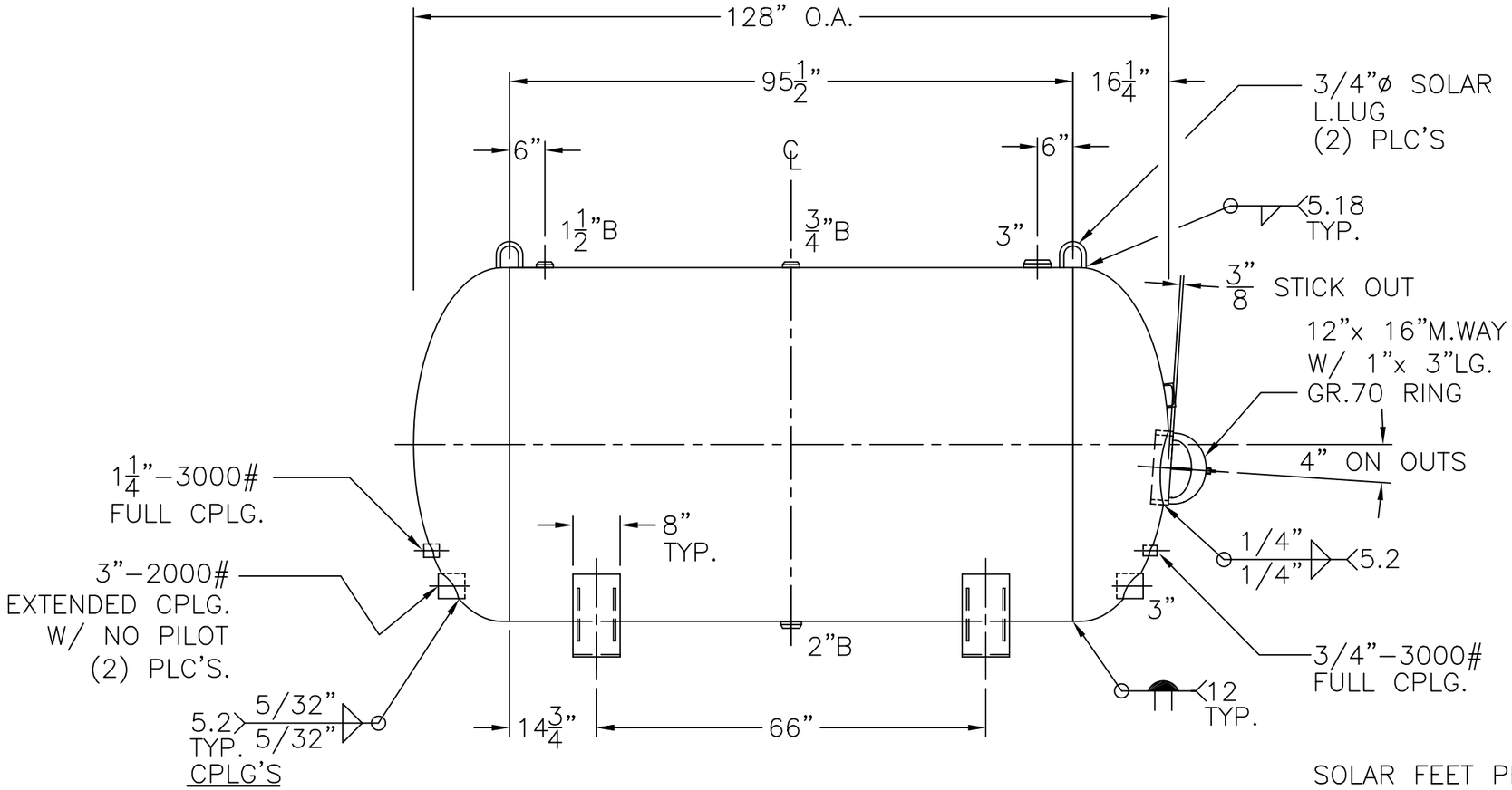

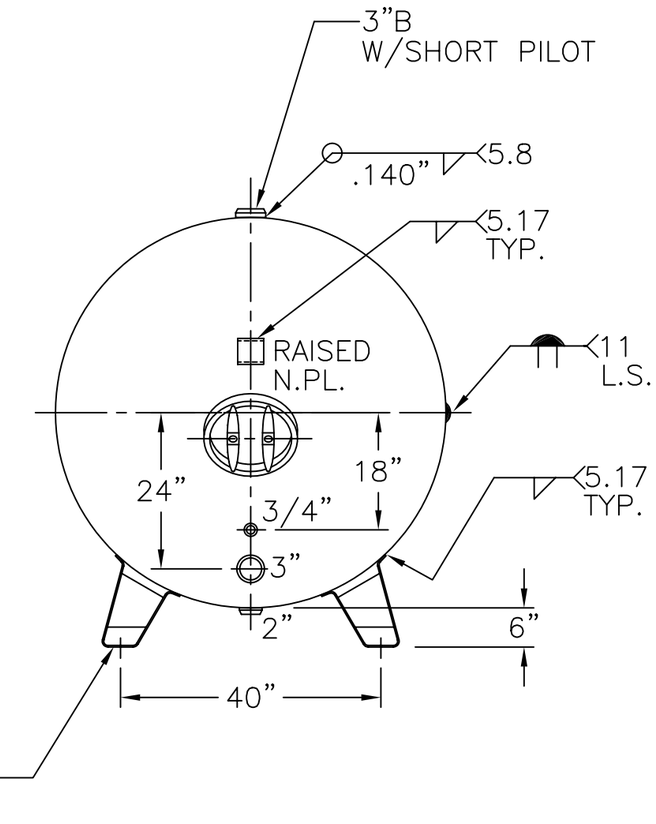

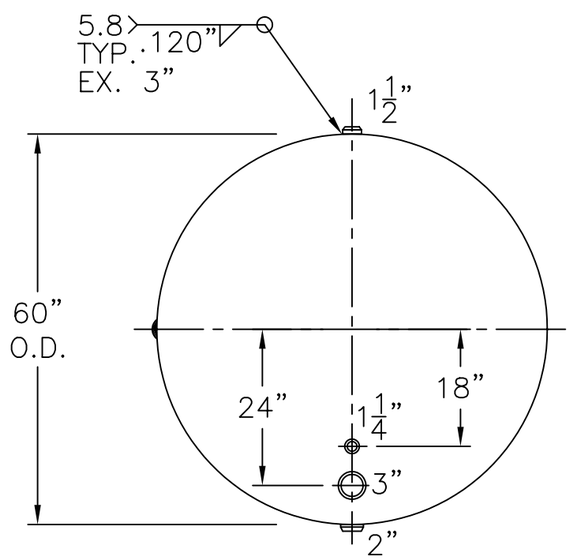

VIEW W/OUT SUPT'S

NOTE: 1) HYDRO @ 163 PSIG. MIN.

SHELL / HEADS	.248" SA-455 2:1 S.E.	ES-60-1450-H	REV. 9-21-04
	(.211" MIN.)		DATE: 10-5-89
		FOR: HANSON STANDARD	
		HORIZ. WATER TANK.	
	.207" SA-455	SURFACE AREA = 180.2 SQ. FT.	
		INSIDE: EPOXY LINED	
M.A.W.P. 125 PSIG. @ 180 °F			
M.D.M.T. -20 °F @ 125 PSIG.		OUTSIDE: PRIME	
ASME. SECTION VIII DIV. 1, 2001 ADD 2003		CAD "B" SIZE UNDER "STD"-SERIES	
X-RAY: RT-4 SPOT L.S. & HDS. G.S.		BY: J.G.	SCALE: 1/2"=12"
GALLONS: 1450	WT. 2000 LBS.	ROY E. HANSON JR. MFG.	
SERIAL NO.		1924 COMPTON AVE.	
N.B.		LOS ANGELES, CA 90011	